LPMS-INC1

Dual-Axis High-Precision Inclinometer Sensor

LPMS-INC1 is a high-precision, high-stability dual-axis inclinometer sensor based on MEMS technology.

This product processes the built-in accelerometer sensor data through an integrated processing algorithm, combining filtering and calibration algorithms for correction and calculation. Ultimately, it outputs real-time digital data, including uncalibrated raw acceleration data, calibrated acceleration data, inclination data, and temperature data.

In terms of communication, the LPMS-INC1 offers multiple interface options for different applications, including RS232, CAN, RS485, or TTL. (Currently only RS232 communication model is available for sale)



Key features

- High-precision, high-stability dual-axis inclinometer sensor based on MEMS technology
- Measurement range: ±90°
- Resolution: <0.001° (IEEE 32-bit single-precision floating-point format)
- Accuracy: 0.011°
- Operating temperature range: -20 to 85°C
- Power supply voltage: 5-36V
- Real-time output: Raw acceleration data, calibrated acceleration data, inclination data, temperature data, etc.
- Multiple communication interfaces

Application

- Engineering Machinery
- Energy & Electric power
- Bridge Construction

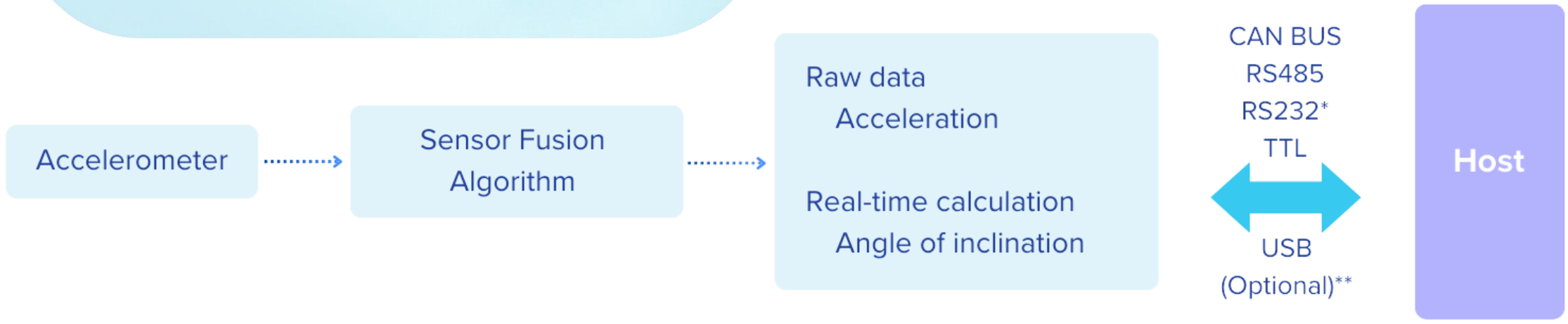

*Currently, only RS232 and CAN communication methods are available for sale.
**For the latest USB communication options, please contact us.

LP-RESEARCH Inc.#201 Re-Flat, 3-10-4, Motoazabu, Minato-ku, Tokyo, 106-0046
Email: sales@lp-research.com Web: https://www.lp-research.com

Sensor specifications

Product name	**LPMS-INC1 RS232**	**LPMS-INC1 CAN**
Size	74 x 40 x 28.5 mm	
Weight	About 184 g	
Communication protocol	LPBUS	CANOpen
Interface*	Currently only RS232 is available	
Baudrate	921600 bps	1M bps
Dip measuring range	X: ±90°、Y: ±90	
Resolution	<0.001° (Float 32 output)	
Accuracy	0.011°(RMS)	
Zero bias error of accelerometer	X, Z: ±20 mg Y: -20 ~ +20 mg	
Zero bias temperature dependence of accelerometer**	X、Y : ±10 mg Z : ±15 mg	
Accelerometer noise density	X, Z : ±20 μg/√Hz Y : 15 μg/√Hz	
Data output format	Raw data / Dip angle / Temperature	
Data output rate	5 ~ 500 Hz	
Power consumption	240 mW (0.02A @12V)	300 mW (0.025A @12V)
Power supply (RS232)***	5-36 V DC	
Connector	M12	
Housing	Aluminum, IP67 rated	
Temperature range	-20 ~ +85℃	

*Please contact us if you need USB communication.
** Difference from zero bias value at room temperature.
*** Performance parameters at room temperature+25 C, and reference values will change at other temperatures.

External dimensions

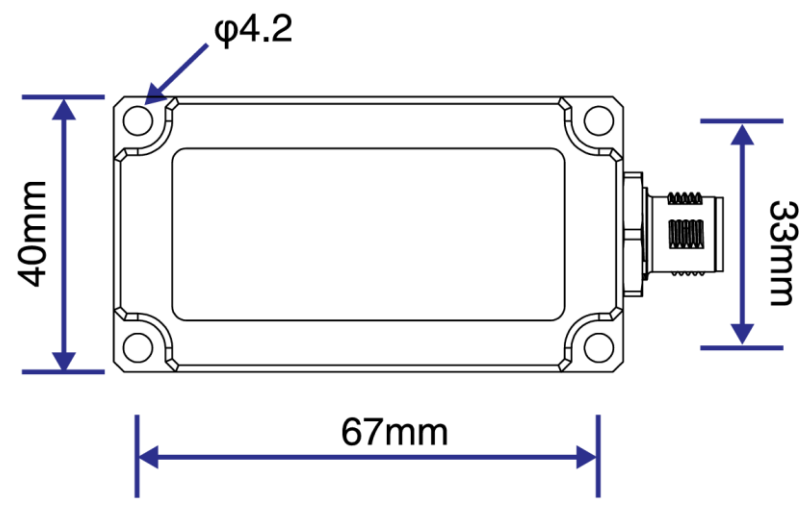

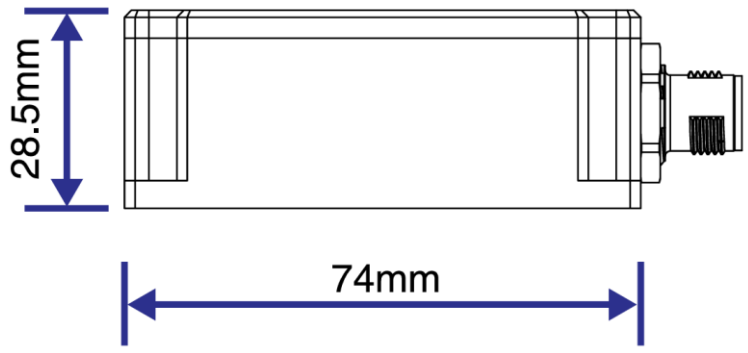

Package

- LPMS-INC1 sensor × 1
- User guide card × 1
- Cable × 1
- Box x 1
- Warranty (1 Year)



GUI of the software

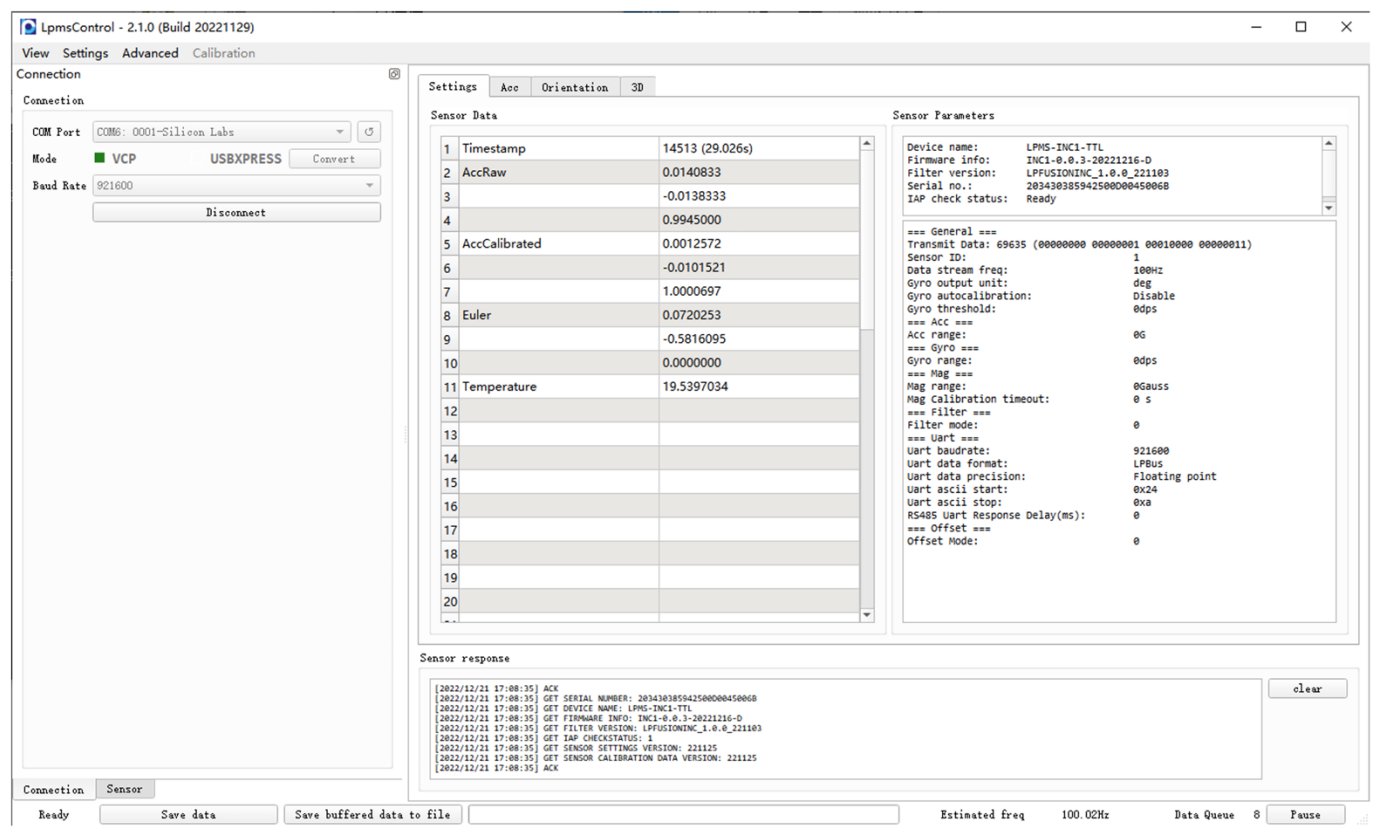

LP-RESEARCH Inc.#201 Re-Flat, 3-10-4, Motoazabu, Minato-ku, Tokyo, 106-0046
Email: sales@lp-research.com Web: https://www.lp-research.com