LPMS-IG1

LPMS Low-Drift, Low-Noise Inertial Measurement Unit (IMU)
with CAN Bus / RS232 Connectivity

The LPMS-IG1 is a 9-axis inertial measurement unit (IMU) offering high precision orientation and linear acceleration measurements in an IP67-rated enclosure. It is equipped with a powerful central processing unit fusing raw data from gyroscope, accelerometer, magnetometer to calculate results on the fly with low drift and high accuracy. LPMS-IG1 perfectly fits application cases in an industrial environment where motion measurements with high precision and low latency are required.



Key Features

- MEMS-based 9-axis inertial measurement unit (IMU) with on-board sensor fusion
- Very low-noise gyroscope for low-drift measurements with a bias stability of 4°/hour
- Dual gyroscope mode with additional high-range gyroscope for measurements above 400°/s up to 2000°/s
- Real-time, on-device calculation of sensor orientation and linear acceleration
- CAN bus (partial CANopen support) or RS232 communication interface options (all models include a USB connection)
- IP67 rated housing (dustproof and waterproof)
- Versatile software and library support for data acquisition and sensor configuration

Application

- Robot manipulator forward kinematics control
- Automotive dead reckoning
- Object orientation tracking for VR/AR
- Automatic guided vehicle (AGV) navigation

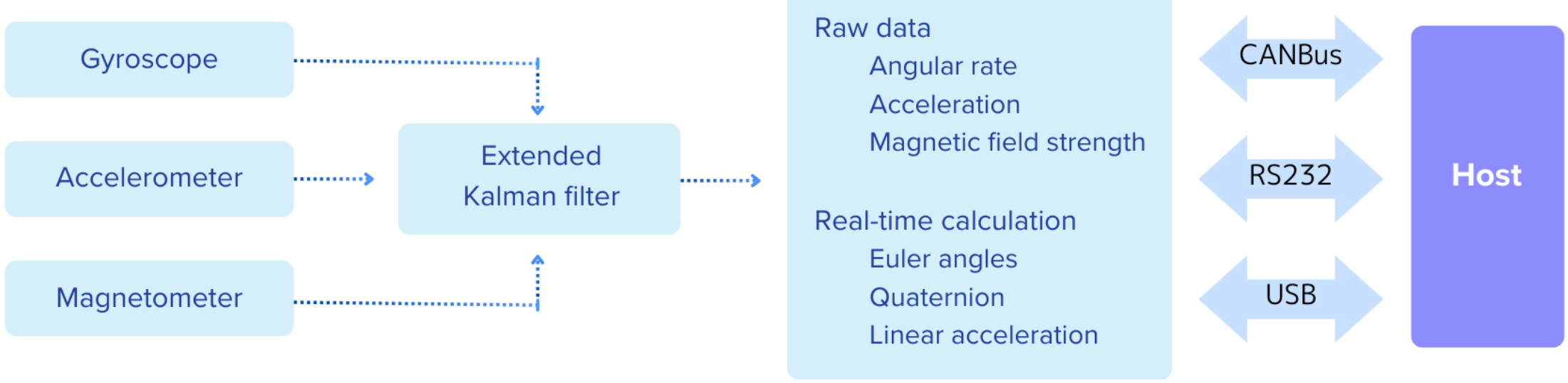

LP-RESEARCH Inc.#201 Re-Flat, 3-10-4, Motoazabu, Minato-ku, Tokyo, 106-0046
Email: sales@lp-research.com Web: https://www.lp-research.com

Sensor Specification

Part Number	**LPMS-IG1 CAN**	**LPMS-IG1 RS232**	**LPMS-IG1 RS485**
Communication Interface	CAN BUS, USB	RS232, USB	RS485, USB
Max. Baudrate	1M bit/s	921600 bit/s	256000 bit/s
Communication Protocol	LP-CAN / CANopen	LP-BUS/ ASCII	LP-BUS/ ASCII
Size	51 x 45 x 24 mm		
Weight	V4: 114.2 g		
Orientation Range	Roll: ±180°; Pitch: ±90°; Yaw: ±180°		
Resolution	0.01°		
Accelerometer	3-axis, ±2 / ±4 / ±8 / ±16 g, 16 bits		
Gyroscope	Dual gyroscope design: #1: 3-axis, ± 400 dps, 24 bit, #2: 3-axis, ± 1000 / ± 2000 dps, 16 bit		
Static Orientation Stability	#1:4°/hour, #2: 6°/hour		
Gyroscope Noise Density	#1: 0.002 dps/√Hz, #2: 0.004 dps/√Hz		
Magnetometer	3-axis, ±2 / ±8 gauss, 16 bits		
Data Output Format	Raw data / Euler angle / Quaternion		
Data Transmission Rate	5 ~ 500 Hz		
Power Consumption	0.252 (0.021A@ 12 V)	0.216 (0.018A@ 12 V)	0.24 (0.02A@ 12 V)
Power Supply	5 V ~ 36 V DC		
Connector	M12 8 Pin (SACC-DSI-MS-8CON-PG 9/0,5 SCO equivalent)		
Case Material	Aluminum alloy, IP67 Waterproof		
Temperature Range	-20 to +80 °C (upon request -40 to +80 °C)		

- Performance parameters are measured at +25°C. Other temperatures may result in varying reference values.

※Please refer to the product manual for more detailed specifications.

External Dimensions

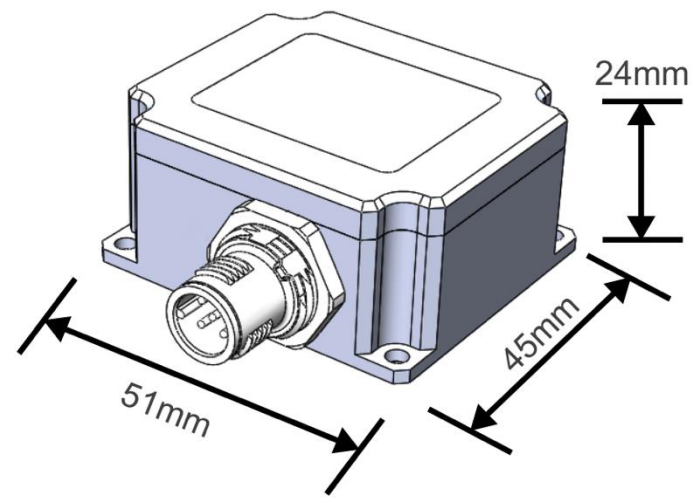

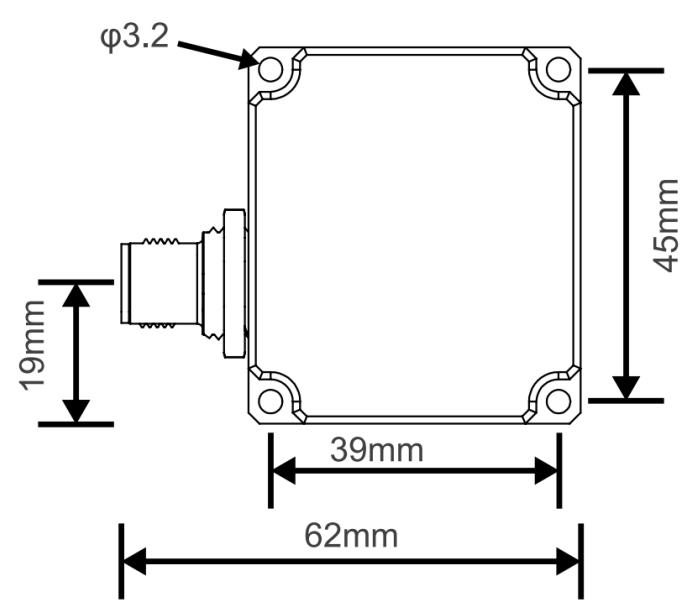

LPMS-IG1 High Precision Gyroscope (#1) Allan Variance Plot

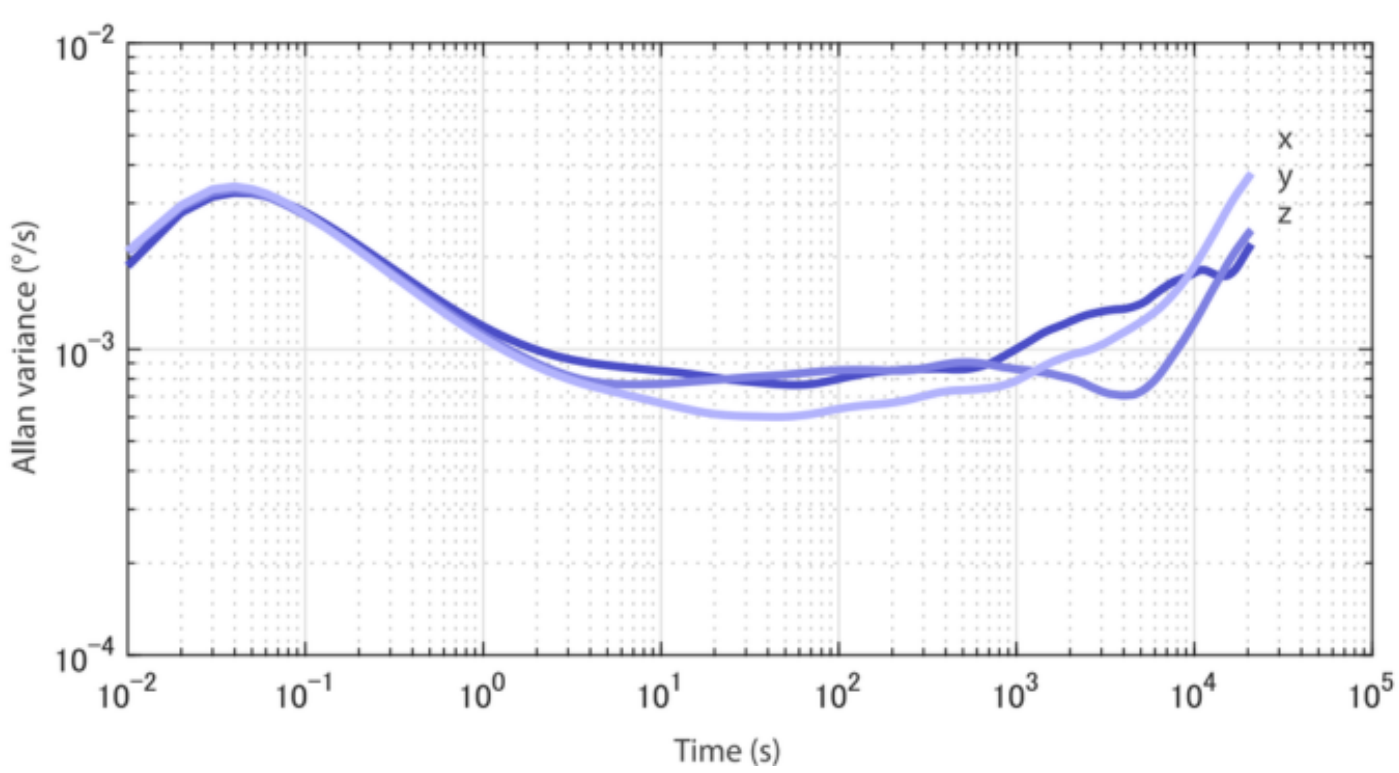

Package

- LPMS-IG1 Sensor x 1
- User Guide Card × 1
- Cable × 1
- Box x 1
- Warranty (1 Year)

LP-RESEARCH Inc.#201 Re-Flat, 3-10-4, Motoazabu, Minato-ku, Tokyo, 106-0046
Email: sales@lp-research.com Web: https://www.lp-research.com