Main uses

LPMS-IG1W

9-AxisIMU(Inertial Measurement Unit)/AHRS(Pose Measurement)、

Wi-Fi communication support

The 9-axis IMU sensor LPMS-IG1W detects orientations and acceleration and measures them with high precision. It is possible to communicate with host systems such as PCs and smartphones via Wi-Fi connection. The compact size, high accuracy, waterproof case (IP67), and powerful CPU inside the sensor process data from the gyroscope, accelerometer, and magnetometer, and provide low-drift, high-precision results in real time. It is suitable for industrial environments where highly accurate, low-latency measurements are required.



Key Features

- MEMS 9-axis IMU with sensor fusion function
  ・Equipped with low-noise/low-drift (4°/h) gyroscope
- Equipped with two types of gyro, enabling measurement over a wide range (400 to 2000°/s)
- Pose/linear acceleration calculated in real time inside sensor
- Wi-Fi connection supported・Waterproof (IP67) and shock-resistant up to 10,000G. Suitable for industrial environments.

Application

- Remote-controlled robots, robot arms, etc.
- IoT applications such as abnormal vibration detection
- VR/AR tracking systems
- AGV navigation systems

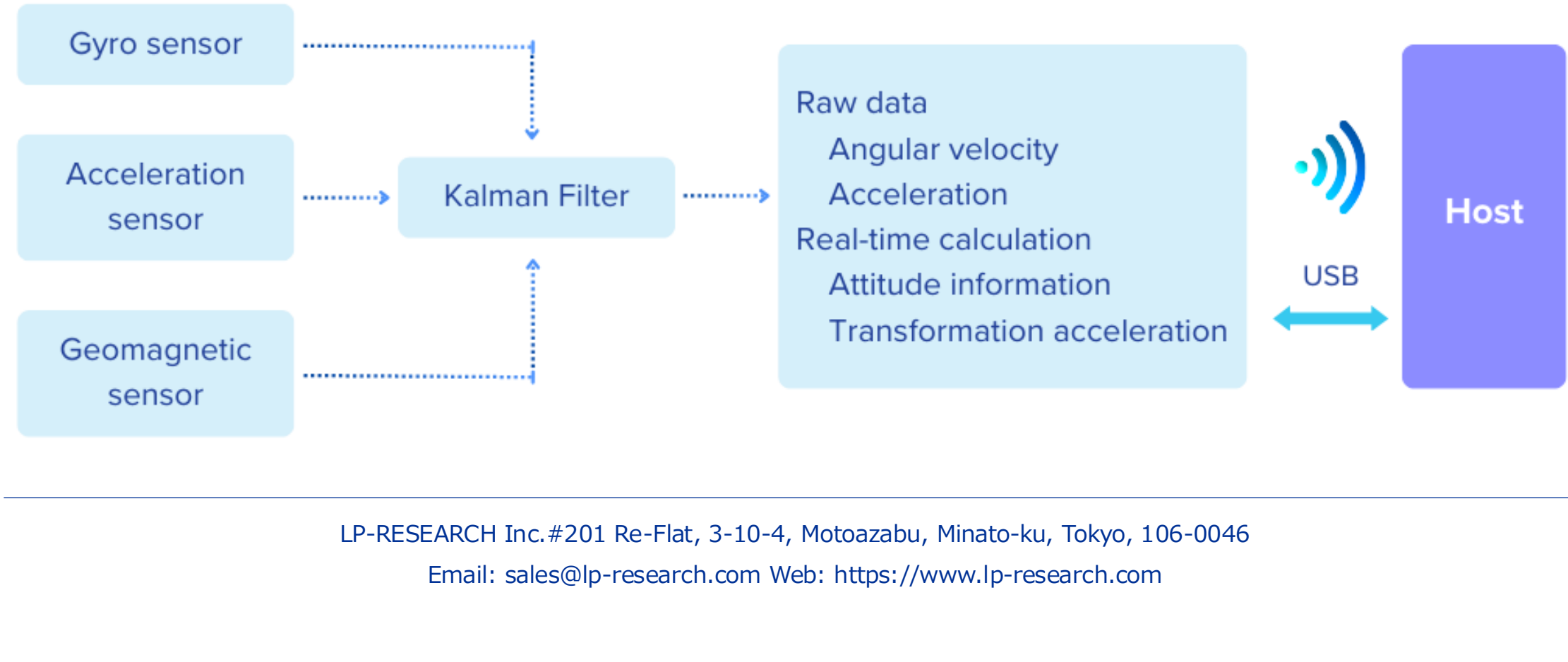

LP-RESEARCH Inc.#201 Re-Flat, 3-10-4, Motoazabu, Minato-ku, Tokyo, 106-0046
Email: sales@lp-research.com Web: https://www.lp-research.com

Two types of connection methods

1 Without Wi-Fi router

Connection example

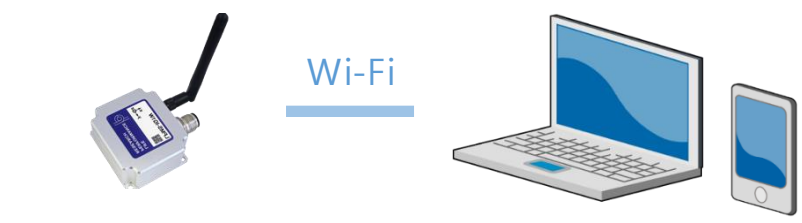

LPMS-IG1W
Host

Client

LPMS-IG1W becomes a Wi-Fi hotspot, and can be directly connected without a Wi-Fi router

2 With Wi-Fi router

Connection example



LPMS-IG1W
Client

Wi-Fi router

Gateway
Host

If there is a Wi-Fi network, data can be sent via MQTT

Data Acquisition method Data can be acquired via socket communication or MQTT

Check sensor data and change settings remotely.

The LPMS-IG1W can host web pages

・This product can host web pages on its own
・Devices on the same network as this product or via a web browser can access it

Remote data confirmation, modification, and operation

・Measurement data from this product can be confirmed in real-time graphs from the hosted web page
・The connection status and temperature of this product can also be confirmed
・Various settings such as the type of data to be acquired and measurement frequency can be changed remotely
・Sensor commands such as the calibration initialization command can also be executed

Example of how it will look in the browser (the screen is still under development)

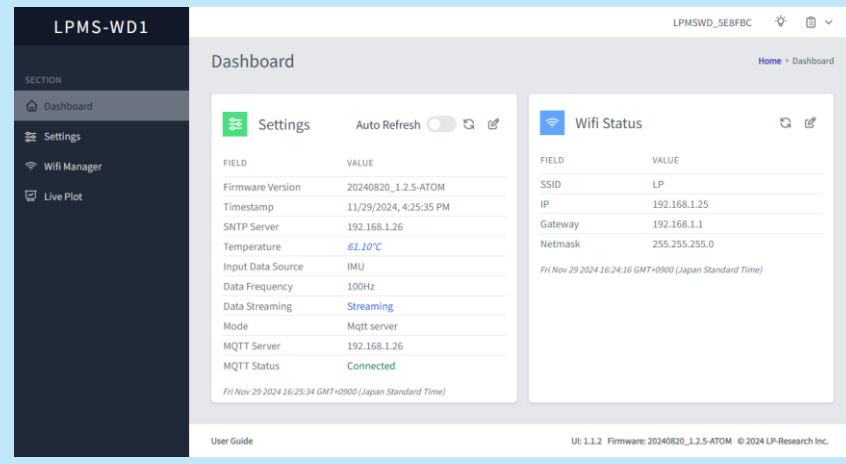

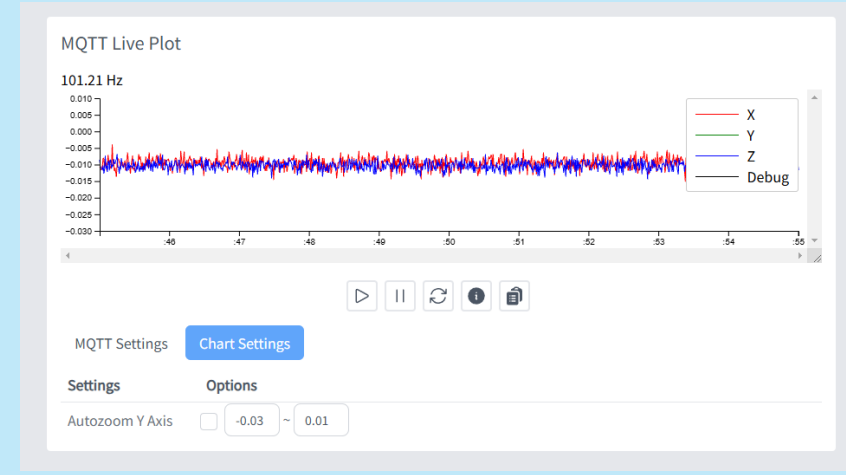

LP-RESEARCH Inc.#201 Re-Flat, 3-10-4, Motoazabu, Minato-ku, Tokyo, 106-0046
Email: sales@lp-research.com Web: https://www.lp-research.com

Sensor Specifications

Part number	**LPMS-IG1W**
Interface	Wi-Fi + USB
Weight	115g
Size	51×45×24mm
Static orientation stability	#1: 4 °/hour, #2: 6 °/hour
Orientation range	360° about all axes
Resolution	< 0.01°
Accuracy	< 0. 3° (static), < 1° RMS (dynamic)
Accelerometer	3-axis, ±20 / ±40 / ±80 / ±160 m/s2, 16 bits
Gyroscope (2 types installed)	Gyro #1: 3-axis, ± 400 dps, 24 bit; Gyro #2: 3-axis, ± 1000 / ± 2000 dps, 16 bit
Magnetometer	3-axis, ± 4 / ± 8 / ± 12 / ± 16 gauss, 16 bits
Gyro-noise density	#1: 0.002 dps/√Hz, #2: 0.004 dps/√Hz
Data output format	Raw data / Euler angle /Quaternion
Data output rate	5 ~ 500 Hz
*Power consumption	0.85W (0.07A@12V)
Power supply	5 V ~ 36 V DC
Temperature range	-20 ~ +80°C
Connector	M12 connector
Case material	Aluminum, waterproof (IP67)
Wi-Fi information	Maximum transmission distance: 10 ~ 30m (※1), Wi-Fi frequency band: 2.4GHz, Communication protocol: TCP/IP or MQTT, Wi-Fi output frequency: MQTT 5～200Hz, Socket 5~500Hz
Software	Windows C++ library, Java library for Android, LPMS Control (Data analysis software), Open Motion Analysis Toolkit (OpenMAT) for Windows

※1: The communication range may change depending on the usage environment.

* Performance parameters are measured at **+25°C**. Other temperatures may result in varying reference values.
※Please refer to the product manual for more detailed specifications.

External dimensions

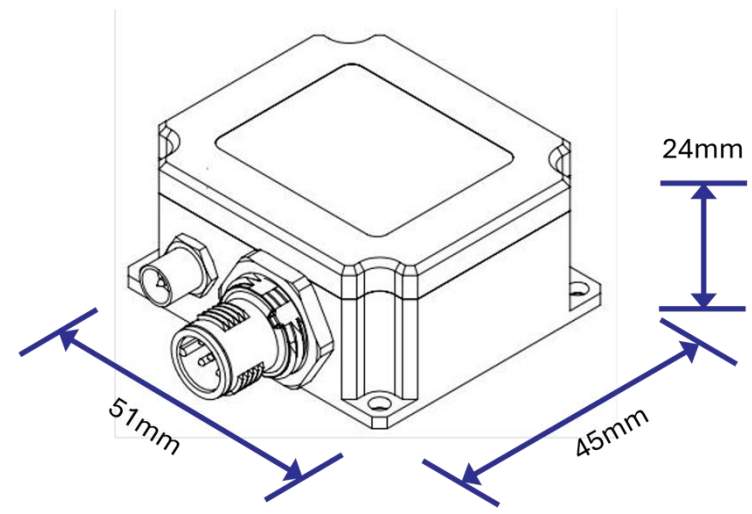

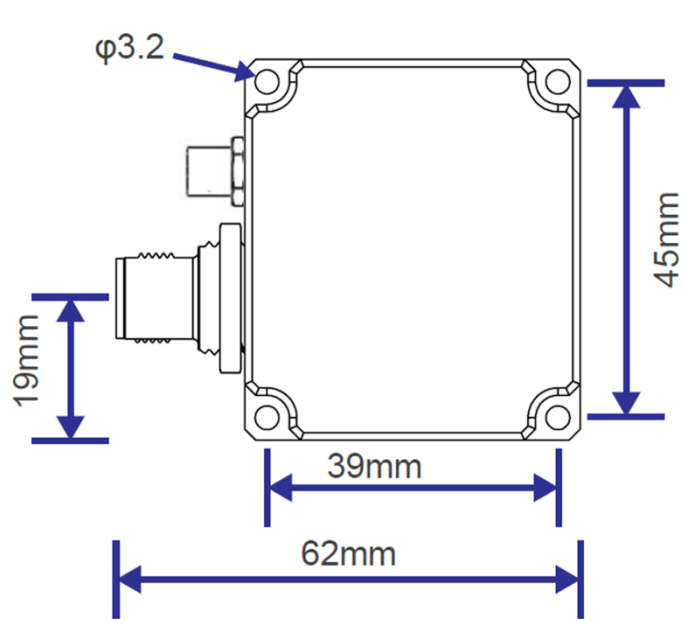

LPMS-IG1W High-precision gyroscope (#1) Allan variance graph

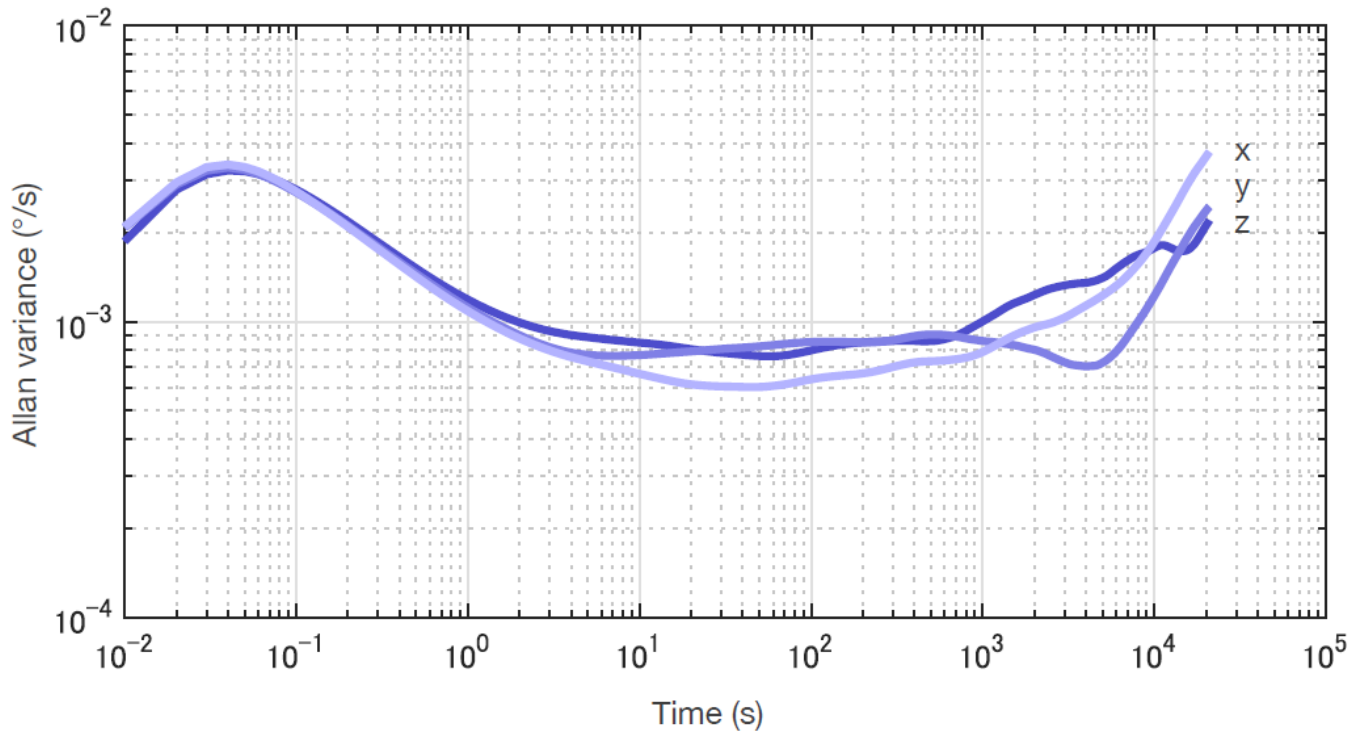

Package

- LPMS-IG1W sensor× 1
- Antenna× 1
- Instruction Manual× 1
- Cable (included USB connector) × 1
- Warranty (1 year)

LP-RESEARCH Inc.#201 Re-Flat, 3-10-4, Motoazabu, Minato-ku, Tokyo, 106-0046
Email: sales@lp-research.com Web: https://www.lp-research.com